OPERATION AND INSTALLATION INSTRUCTIONS

3209

MODELS 3204 and 3210

DIGITAL VOLTMETERS

non-linear systems, inc.

non linear systems, inc.

DEL MAR, CALIFORNIA

MP MASTER

MA33780

DOCUMENT NO. 532
March 1964

OPERATION AND INSTALLATION INSTRUCTIONS

3209

MODELS 3204 and 3210 DIGITAL VOLTMETERS

NOTE

The Model 3204 is the same as the NLS Model RV2P.
The Model 3210 is the same as the NLS Model RV2B.

CAUTION

Before attempting to operate the battery-powered Model 3210, read carefully the battery-charger instructions on pages 5 and 10.

INTRODUCTION

The NLS Models 3204 and 3210 are 4-digit digital voltmeters which are ideally suited for applications requiring high common-mode rejection and complete ground isolation. The 3210 is a compact one-piece, rechargeable battery-operated instrument; the 3204 is similar except that it operates from the AC power line.

Both instruments are completely automatic and permit highly accurate voltage measurements to be made of virtually any electronic circuit. High common-mode rejection allows measurements to be made without encountering problems which occur from leakage to ground or from the effects of common mode signals. Complete ground isolation is possible because the 3204 and 3210 have little coupling to power lines; circuits are not electrically connected to the outer case. Built as a "box within a box," the instrument is virtually immune to many types of outside electrical interference.

The reed relays which operate the decades help to provide a high level of reliability in this instrument. Also contributing to reliability is a new style readout which has independent window segments for each digit column. The incandescent lamps used in this readout have a life expectancy in excess of 5,000 hours; the lamps are directly wired to small printed-circuit boards for group replacement, thereby eliminating considerable lost time in replacing individual lamps when they burn out. When one lamp fails at the end of its rated life, others are certain to follow within hours, or perhaps days. By replacing all of the bulbs within a module assembly at once, down time is reduced.

The SENSITIVITY control, as with any digital voltmeter, will aid in reducing readout fluctuations produced by noisy signals; but when this control is backed off, the AC common-mode rejection is actually increased without reducing the instrument's sensitivity.

Unlike many other digital voltmeters which can lock in with 60 cps noise signals, the 3204 and 3210 use a 200-cycle input sample rate which will not lock in.

Reliability in this instrument has been enhanced by the use of conservatively rated transistor circuits and identical decade assemblies, complete with logic, lamp buffers, and reed relays which have a life expectancy in excess of one billion operations.

Reliability in the battery operated 3210 is assured because the built-in charger cannot damage the batteries even if it is allowed to operate continuously. The batteries used are of the highest quality nickel-cadmium type which are free from spillage problems, corrosive fumes, and have the ability to hold a charge for a long time when not in use.

As with other NLS instruments, the 3204 and 3210 operate at full accuracy to the least significant digit; the input impedance is 10 megohms on all ranges so that absorption of an input signal is nil.

Those users who do not require the isolation and portability afforded by the 3210 will find that the 3204, which operates only from the power line, is the same in all respects--even the common-mode rejection is at the same high level.

If there are problems encountered with this instrument, or if assistance is needed to fit the instrument to a particular application, please contact the nearest NLS field engineer or the main plant: NLS, Del Mar, California.

SPECIFICATIONS

VOLTAGE RANGES

±9.999/99.99/999.9 VDC, 4-digit display. For low-level measurements, use NLS 140, 143, or 144 Preamplifier. For AC measurements, use NLS 125B AC to DC Converter.

RANGE AND POLARITY CHANGING

Automatic

ACCURACY

± (0.01% of range in use + 1 digit).

SPEED

Average speed is approximately 4 readings per second; slowest possible reading is 2.5 readings per second; fastest possible reading is 5 ms.

INPUT RESISTANCE

10 megohms

COMMON MODE REJECTION (CMR)

DC common-mode rejection exceeds 120 db; with a 1,000 VDC common-mode-signal injected, the reading will not be affected by more than 0.01%.
AC common-mode rejection is 120 db with a low-impedance input line; a 1,000-volt (RMS), 60-cycle common-mode signal will not cause a 0.01% reading change on any range. CMR is actually higher, but the 1,000-volt insulation specification precludes stating a higher figure.
AC, with an input line imbalance of 1000 ohms, will provide a CMR of 86 db; thus a 20-volt (RMS) 60 cps common-mode signal will not cause more than a 0.01% reading change on any range.

By rotating the front-panel SENSITIVITY control toward LO just enough to achieve a stable reading in the presence of noise having a periodic waveform, the CMR can be increased to 105 db (representing a 180-volt RMS, 60 cps signal) with no sacrifice in resolution.

INPUT FILTER

LC-type input filter attenuates signal-mode noise.

INPUT SAMPLING RATE:

200 cps. This rate avoids "lock-in" with 60 cps noise signals.

LOGIC

Tracking type logic is used. Within any one decade, voltage increases are "tracked" or followed in 1-digit steps (0.005 sec/step). Also, when required, the decade will move from 0 to 9 without going through intermediate numbers when an increase from 0 is required. Conversely, each decade skips unneeded steps when counting down.

READOUT

Five plug-in modules are used, four for the decades, and one to indicate polarity and state of battery charge (3210 only). Incandescent lamp life exceeds 5,000 hours.

POWER SOURCE

3204: 115 VAC 60-cycle power source; power consumption is 20 watts.

3210: Internal, rechargeable battery pack. Charger and automatic charge-rate circuitry is built in (instrument may be operated while battery is being charged). Charger operates from 115 VAC 60-cycle power source. Battery provides 4 hours of continuous operation; recharge time is 16 hours; battery will take at least 750 charge-recharge cycles before requiring replacement.

INSTALLATION AND OPERATION

1. UNPACKING THE INSTRUMENT

The Models 3204 and 3210 are completely enclosed and may be operated on a bench or mounted into a standard 19" rack. The instrument is shipped in a polystyrene-bead container from which it may be lifted along with its cables. Be certain that all of the required cables have been supplied (as indicated on cabling drawings) and that there is no visible damage. If damage is apparent, notify the carrier at once.

2. POWER SOURCE

The 3204 derives its power from a 105-125 VAC 60-cycle source. The 3210 derives its power from a self-contained battery of nickel-cadmium cells which are recharged by a built-in charger. A power-line fuse is used in each instrument, and in the 3210 an additional fuse protects the charger circuit. The fuses are of the 3AG slo-blo type. The 3204 has a single .3 ampere fuse; the 3210 requires a 1.5 ampere fuse for the charger and a 1 ampere fuse for the battery.

3. CONTROLS

The front panel has three controls (3204 has only the first two):

POWER

The POWER switch has three positions.

OFF. In this position the instrument is de-energized, but in the 3210 the cooling fan runs to keep the batteries at ambient.

STANDBY. In this position the amplifier circuit is disabled so that a particular reading may be preserved despite a fluctuating or zero input voltage.

ON. In this position the instrument operates normally.

SENSITIVITY

This continuously variable control is normally kept in the full clockwise position. If spurious signals, or noise interferes with the readings being taken, this control may be backed off until the readings stabilize. Note that there is no loss of sensitivity when this is done and that the common-mode interference rejection capability is as high, or even higher.

CHARGER SWITCH

NOTE

Always leave the charger on whenever possible.

Set the charger switch to ON. Depending upon the state of the battery, the charging rate may be either slow or fast. If the battery is discharged the CHG light will illuminate. If the battery is partially charged, the readout may display SLO CHG. The charger can be set to the fast charge rate by slowly turning the

charger switch to RESET and back again to ON. Once the charger returns to slow charge, it should not be reset. Charging can be interrupted at any time by setting the charger switch to OFF; however, it is recommended that the batteries be charged fully after each use.

The charger switch should always be set to OFF when the power cord is removed from the 115-volt source.

Operation of the charger is not affected by the setting of the meter power switch.

CALIBRATION

This section gives information on how to calibrate the 3204 and 3210. The procedure is quick and simple if the correct equipment is used:

1. An EMF standard, such as the NLS p/n 3006 is required. This standard contains nine unsaturated cadmium standard cells connected in series, and provided with Superior Electric Five-Way binding posts which are connected to each series junction to make the voltage available from each cell. The available voltages range from approximately 1.019 to 9.172. This calibration standard is supplied with two calibration tables which indicate voltage values carried to six decimal places accurate to ± 0.01%. One table gives the open-circuit EMF; the other table gives the output voltage values for a 10-megohm load, a typical load requirement for testing digital voltmeters, The table for a 10-megohm load is valid only at the temperature at which calibrated. In addition, the tables give the cumulative voltage of the cells such as 1.01924, 2.03843, 3.05764. . . --through 9.17724. These cells have been calibrated at the NLS Standards Laboratory with an NBS certified primary reference consisting of saturated Eppley Standard Cells housed in a Julie Research Laboratories oven.

2. A ratio box such as the NLS p/n 3020 is also needed. This box provides accurate 10:1 and 100:1 attenuation with convenient switching facilities for fast, accurate calibration of digital voltmeter range-changing circuits. This ratio box is connected with Superior Electric Five-Way binding posts for convenient connection to the digital voltmeter along with an MS3102A-14S-2P Amphenol connector for connecting an external power supply. The 10:1 and 100:1 ratios are established at the NLS Standards Laboratory with strings of Julie resistors,each accurate to ±0.0015%. Using the techniques described in Julie Research Laboratory Notes, twenty 100K Julie resistors are used to create a reference voltage divider more accurate than ±0.0015%.

3. A decade voltage divider such as the Dekavider DV-411.

4. Stable, but not necessarily precise, DC voltages of 95-99 and 950-990.

5. A source of 1.5 volts DC; a common carbon-zinc cell may be used.

Prior to taking the steps which follow, the instrument should be allowed to warm up for 30 minutes with the cover in place. When ready to proceed, the top cover is removed to provide access to calibration points.

1. AMPLIFIER GAIN SETTING

Connect the input cable of the instrument to a source of 1 1/2 volts DC in series with a DV-411 Dekavider. Slowly adjust the Dekavider control to decrease voltage. Adjust R1 counterclockwise until the instrument counts down in two-digit steps when the voltage is reduced by the Dekavider. Then adjust R1 clockwise until the instrument barely counts down in one-digit steps when the Dekavider output voltage is reduced.

2. ABSOLUTE ACCURACY

Disconnect the Dekavider and voltage source from the input cable; connect an EMF standard, such as the NLS p/n 3006, to the input. Adjust potentiometer R3 and, if necessary, R4, so as to obtain exact digital correspondence with the known output of the EMF standard.

3. RANGING, 100 VOLTS

R5 is used for the calibration of the 100-volt range. Apply a voltage of about 95 volts to the input of the precision divider box and set the control to observe 90/100 volts. Then switch the control to 90/1 volts and adjust R5, if necessary, until digital correspondence occurs with only the decimal point shifting one place. For example, when the divider is switched, a reading of 95.25 should change to 9.525.

4. RANGING, 1,000 VOLTS

CAUTION: HIGH VOLTAGE
Step 4 requires the use of dangerous voltage.
BE CAREFUL!

R6 is used for calibration of the 100-volt range. Apply a voltage of about 950 volts to the input of the precision divider box and set the control to observe 900/100 volts. Then switch the control to 900/1 and adjust R6, if necessary, until digital correspondence occurs with only the decimal point shifting two places. For example, when the divider is switched, a reading of 954.2 should become 9.542.

5. FINAL CHECK

As a final check, return to Step 2 and again adjust the instrument to the standard cells. This step completes the calibration procedure.

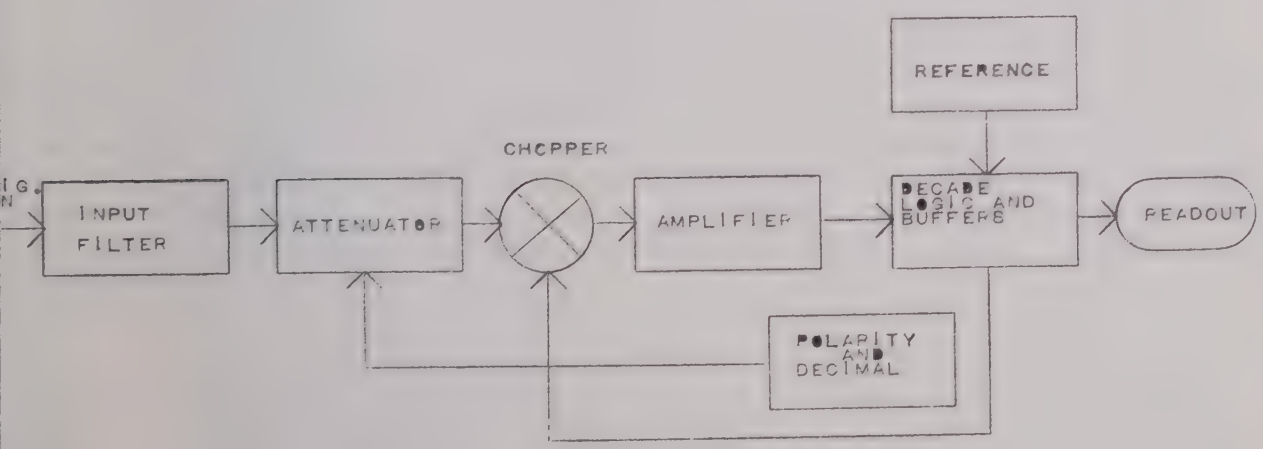

This simplified block drawing is typical for all 3200 Series instruments. In designated models, an AC-to-DC converter is added to the input; also certain models have manual polarity and decimal functions.

MAINTENANCE

Since the 3204 and 3210 digital voltmeters are complex instruments with hundreds of solid-state components, it is difficult to locate readily any single defective item. If additional plug-in boards are available from a second spare instrument, or better yet, from a stock of spare boards, down time can be kept at a minimum. The 3204 and 3210 lend themselves particularly well to a plug-in maintenance philosophy because each of the decades uses identical boards.

On the other hand, a defective board can be located without the need for spares, in the case of the relay boards. If it appears that the instrument is malfunctioning in a particular decade, it is only necessary to interchange the board located directly behind the window displaying the erroneous readings with a board behind any other decade. If the difficulty continues to appear, but in a different decade, then the defective board has been isolated and a serach may be made for a defective component.

If relay-board substitution does not correct the condition, or if the instrument operates abnormally in two or more decades, then the amplifier boards should be suspected. If readings are erratic and the instrument does not settle out on its readings, then the chopper should be suspected. Since the chopper is of the plug-in type, it is well to have a spare on hand.

The reference supply is of a new design which does not require the use of an oven to maintain rated stability; instead, it relies upon a pair of zeners having matching, but opposite, temperature characteristics so that their output is normalized to specifications. It is not practical to open the reference supply container because new modules are available from the factory, and these have been tested to assure the required reference voltage accuracy.

The readout is comprised of separate digit modules which may be individually extracted from the front of the instrument after the visor has been removed (removal directions are given on the top of the visor). Readout lamps are installed at the top and bottom of each digit module. These lamps are intended for group replacement since when one lamp fails, the others are at or near the end of their rated lives. If the window panes have accumulated dust, they may be easily cleaned by swishing the whole unit through a bath of isopropyl alcohol with the lamp modules removed; more elaborate cleaning requires that the module be returned to the factory since disassembly is difficult because the parts are small and delicate.

BATTERY CHARGER INFORMATION

Model 3210 Digital Voltmeters are powered by sealed, sintered plate nickel-cadmium batteries which can be charged or discharged in any position. Water, electrolyte, or other physical maintenance is not required. Nickel-cadmium batteries are used because of this minimum maintenance requirement and because of their high rate of discharge per weight and volume. They have a life expectancy of over 750 complete cycles of charge and discharge under normal operating conditions.

For maximum life, the batteries should not be excessively charged or discharged. The digital voltmeter is equipped with a solid-state battery charger circuit that makes it impossible to overcharge or discharge the batteries at normal operating temperature.

The charger actually consists of three separate circuits:
(See schematic drawing 2824)

1. A constant current supply to regulate the charging current at 400 MA (±10%) in the CHG mode and at 100MA (±10%) in the SLO CHG mode. Both modes are automatically controlled by a voltage detection circuit. A low battery potential will activate the CHG mode and a high battery potential will return the charger to SLO CHG. These two operating points are 6.5 volts apart. The voltage detection circuit contains a thermistor, and as the battery temperature increases, the two points are shifted downward. Any component change in this circuit requires recalibration at 77°F. At that temperature, the upper operating point is set at 30.5 volts.

2. A low voltage detection circuit to disconnect the voltmeter from the batteries when the battery potential drops to 22 volts (± .2 volt). When the meter is disconnected, the unloaded battery voltage may rise to 25 volts, in which case the meter will again be connected. This, in turn, lowers the voltage. To avoid this "chatter" the meter should be turned off promptly.

3. An electronic voltage divider circuit to provide the second voltage level required by the meter. The circuit is adjusted to divide the battery voltage exactly by two.

THE INFORMATION DISCLOSED HEREIN WAS ORIGINATED BY AND IS THE PROPERTY OF NON-LINEAR SYSTEMS INC., AND EXCEPT FOR RIGHTS EXPRESSLY GRANTED TO THE UNITED STATES GOVERNMENT, NON-LINEAR SYSTEMS INC. RESERVES ALL PATENT, PROPRIETARY, DESIGN, USE, SALE, MANUFACTURING AND REPRODUCTION RIGHTS THEREITO.

REVISIONS					
SYM	ZONE	EFFECT.	DESCRIPTION	DATE	APPROVED

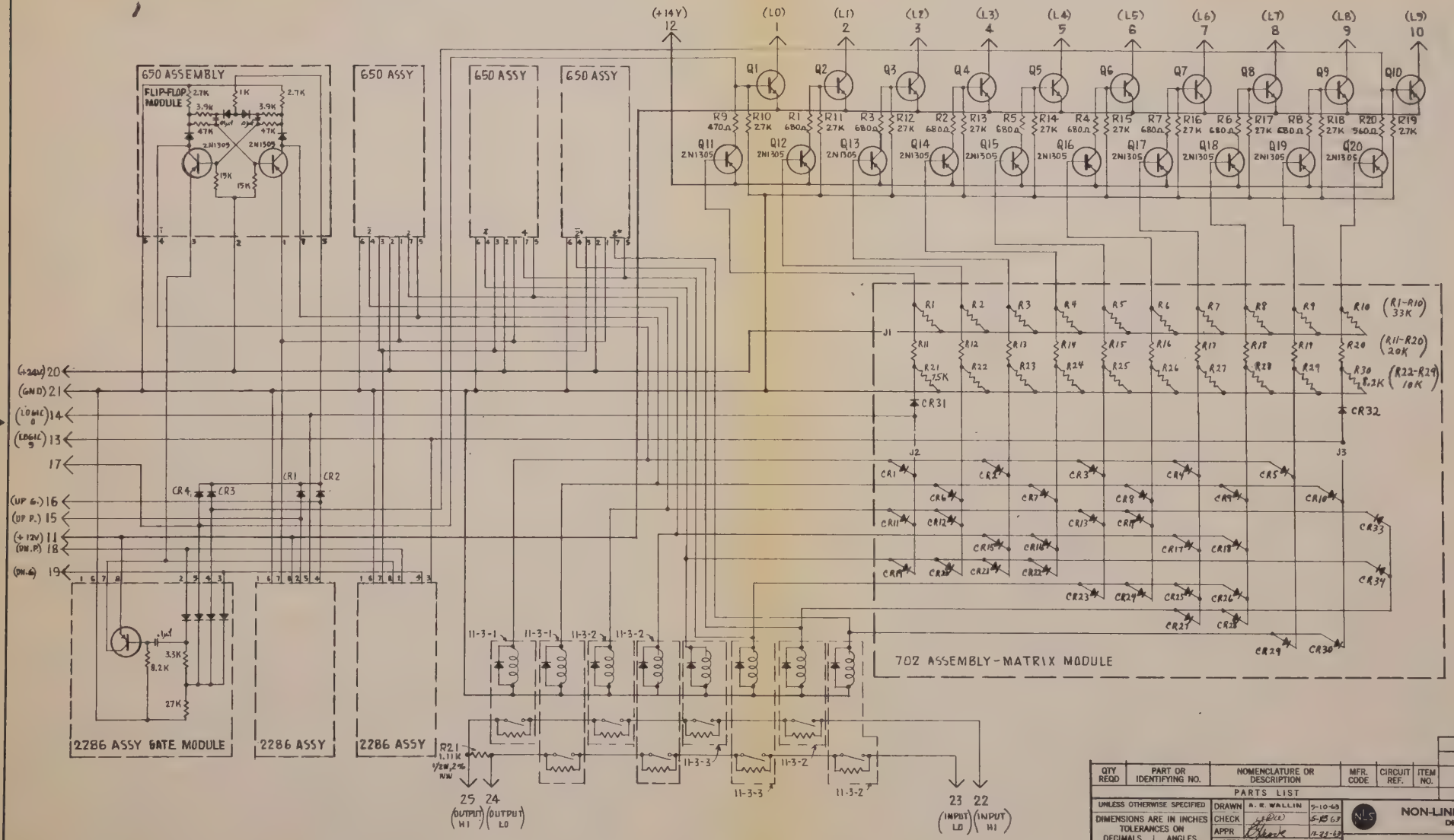

851 SHEET 2

QTY REQD	PART OR IDENTIFYING NO.	NOMENCLATURE OR DESCRIPTION	MFR. CODE	CIRCUIT REF.	ITEM NO.	NEXT ASSY.	FINAL ASSY.	NEXT ASSY	FINAL ASSY.
		PARTS LIST				APPLICATION		QTY.	

UNLESS OTHERWISE SPECIFIED
DIMENSIONS ARE IN INCHES
TOLERANCES ON
DECIMALS ± .010 | ANGLES ± 0° 30'
FRACTIONS ± 1/32
SURFACE ROUGHNESS PER MIL-STD-10 ✓
DO NOT SCALE THIS DRAWING
RELEASE DATE 10-23-63

DRAWN	R. R. WALLIN	5-10-63
CHECK	[illegible]	5-13-63
APPR	[illegible]	11-23-63
MATERIAL	—	
FINISH	—	

NON-LINEAR SYSTEMS, INC.
DEL MAR, CALIFORNIA

SCHEMATIC-
DECADE P. C. BOARD ASSY
RV 2 (SERIES 3200)

CODE IDENT NO. 03626 | SIZE D | 851
SCALE | WEIGHT | SHEET 2

THE INFORMATION DISCLOSED HEREIN WAS ORIGINATED BY AND IS THE PROPERTY OF NON-LINEAR SYSTEMS INC., AND EXCEPT FOR RIGHTS EXPRESSLY GRANTED TO THE UNITED STATES GOVERNMENT, NON-LINEAR SYSTEMS INC. RESERVES ALL PATENT, PROPRIETARY, DESIGN, USE, SALE, MANUFACTURING AND REPRODUCTION RIGHTS THERETO.

REVISIONS					
SYM	ZONE	EFFECT.	DESCRIPTION	DATE	APPROVED
1		ALL	ADDED R2 & R5	10-23-63 ARW	[illegible]

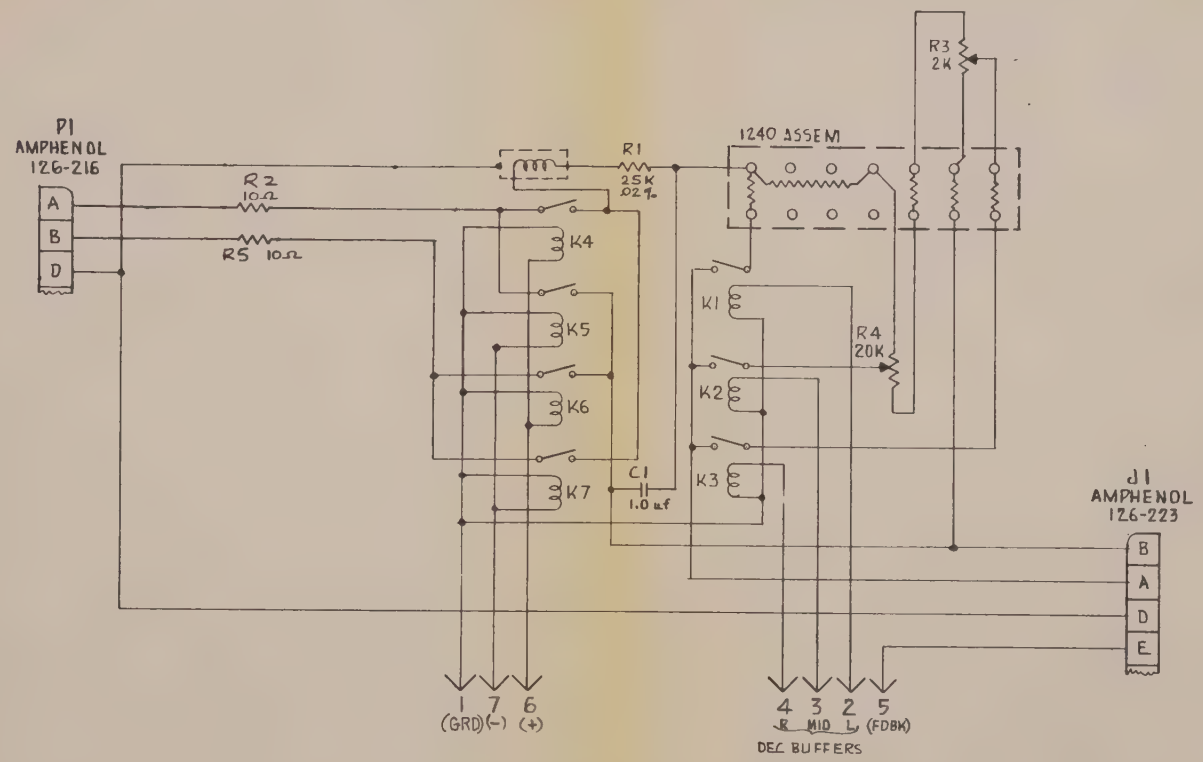

1969
SHEET 2
1

QTY REQD	PART OR IDENTIFYING NO.	NOMENCLATURE OR DESCRIPTION	MFR. CODE	CIRCUIT REF.	ITEM NO.	NEXT ASSY.	FINAL ASSY.	NEXT ASSY.	FINAL ASSY.
PARTS LIST						APPLICATION		QTY.	

UNLESS OTHERWISE SPECIFIED
DIMENSIONS ARE IN INCHES
TOLERANCES ON
DECIMALS ± .010
ANGLES ± 0° 30'
FRACTIONS ± 1/32
SURFACE ROUGHNESS PER MIL-STD-10 ✓
DO NOT SCALE THIS DRAWING
RELEASE DATE 10-24-63

DRAWN	A. R. WALLIN	5-7-63
CHECK	[illegible]	5-7-63
APPR	[illegible]	10-23-63

MATERIAL —
FINISH —

NON-LINEAR SYSTEMS, INC.
DEL MAR, CALIFORNIA

SCHEMATIC
RANGE & POLARITY P.C. BD. ASSY
MODEL RV2 (SERIES 3200)

CODE IDENT NO.	SIZE	
03626	C	1969
SCALE	WEIGHT	SHEET 2 OF 2

DIETERICH-POST CLEARPRINT 1000H-10

THE INFORMATION DISCLOSED HEREIN WAS ORIGINATED BY AND IS THE PROPERTY OF NON-LINEAR SYSTEMS INC., AND EXCEPT FOR RIGHTS EXPRESSLY GRANTED TO THE UNITED STATES GOVERNMENT, NON-LINEAR SYSTEMS INC. RESERVES ALL PATENT, PROPRIETARY, DESIGN, USE, SALE, MANUFACTURING AND REPRODUCTION RIGHTS THERETO.

REVISIONS					
SYM	ZONE	EFFECT.	DESCRIPTION	DATE	APPROVED

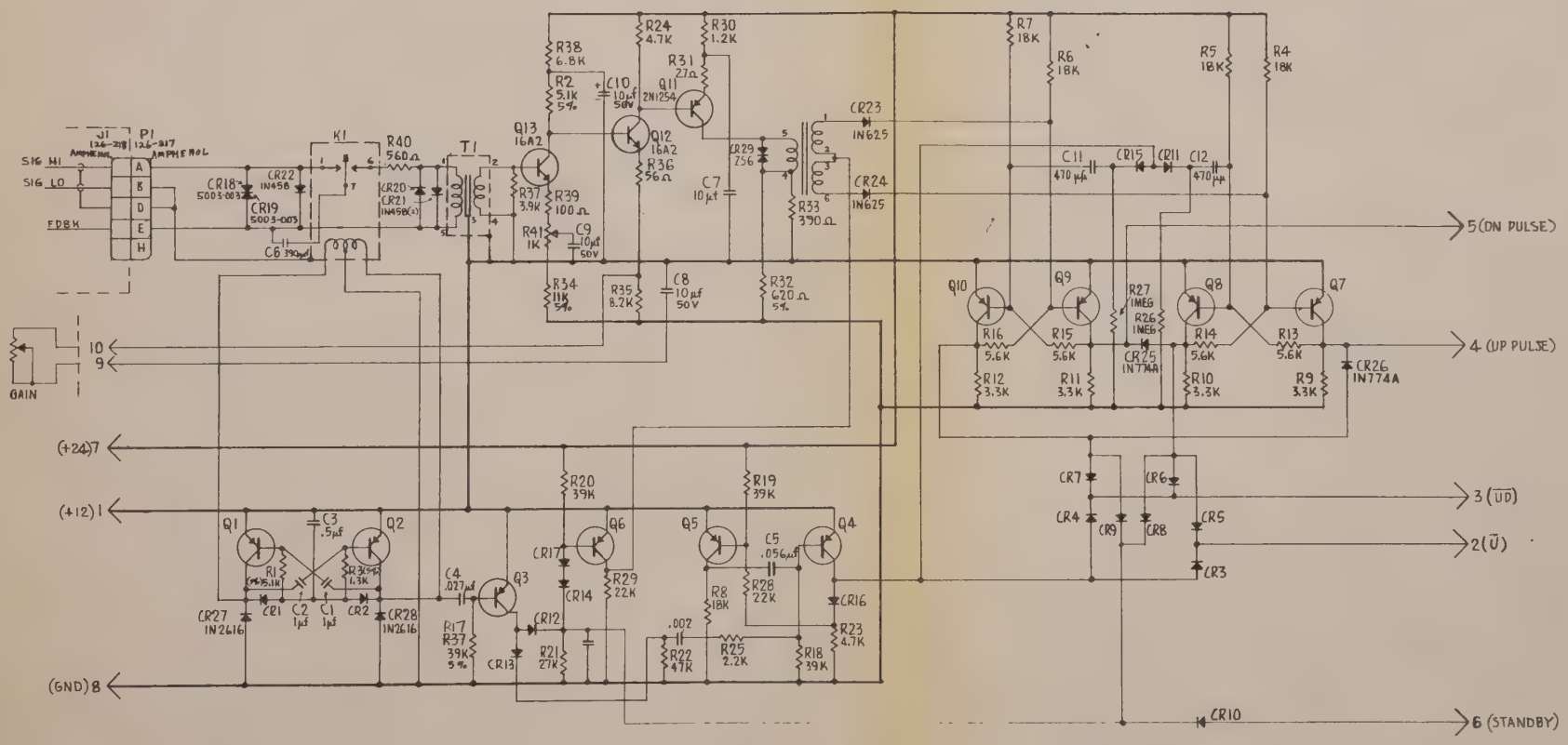

2249
SHEET 2

QTY REQD	PART OR IDENTIFYING NO.	NOMENCLATURE OR DESCRIPTION	MFR. CODE	CIRCUIT REF.	ITEM NO.	NEXT ASSY.	FINAL ASSY.	NEXT ASSY.	FINAL ASSY.
		PARTS LIST				APPLICATION		QTY.	

UNLESS OTHERWISE SPECIFIED
DIMENSIONS ARE IN INCHES
TOLERANCES ON
DECIMALS ± .010
ANGLES ± 0° 30'
FRACTIONS ± 1/32
SURFACE ROUGHNESS PER MIL-STD-10 ✓
DO NOT SCALE THIS DRAWING
RELEASE DATE 10-23-63

DRAWN A. R. WALLIN 5-2-63
CHECK CRW
APPR 10-23-63
MATERIAL —
FINISH —

NON-LINEAR SYSTEMS, INC.
DEL MAR, CALIFORNIA

SCHEMATIC
AMPLIFIER P.C. BOARD ASSY
MODEL RV2 (SERIES 5200)

CODE IDENT NO. 03626
SIZE D
2249
SCALE
WEIGHT
SHEET 2

NOTES: UNLESS OTHERWISE SPECIFIED
1. TRANSISTORS ARE 2N1305
2. DIODES ARE 5003-002
3. RESISTORS ARE 1/2 W, 10%

THE INFORMATION ... WAS ORIGINATED BY AND ... AND EXCEPT ... GOVERNMENT NON-LINEAR SYSTEMS INC. RESERVES ALL PATENT, PROPRIETARY, DESIGN, USE, SALE, MANUFACTURING AND REPRODUCTION RIGHTS THERETO

2518

REVISIONS					
SYM	ZONE	EFFECT	DESCRIPTION		

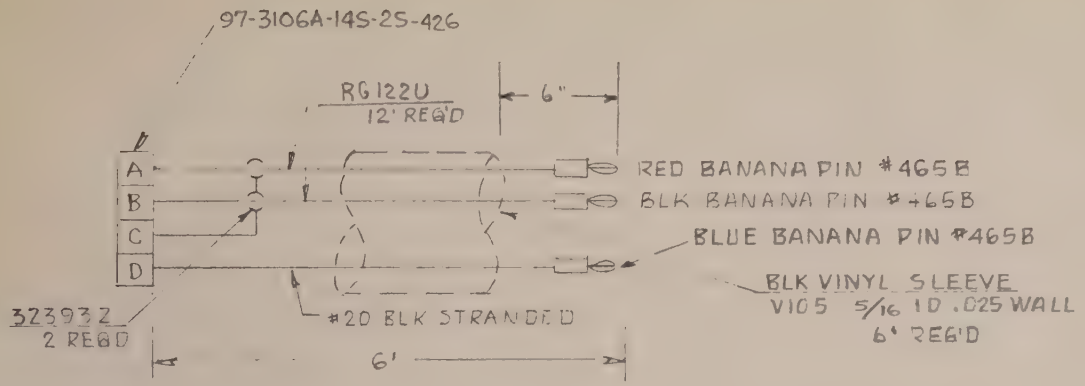

QTY	INCLUDED WITH THIS CABLE
1	1410-C1 SAFE-T-KLIP-BLACK
2	1410-C2 SAFE-T-KLIP-RED
3	3-32 A SPADE LUGS, BIRNBACH

1000	1000		
3444	3444		
NEXT ASSY.	FINAL ASSY.	NEXT ASSY.	FINAL ASSY.
APPLICATION			QTY

UNLESS OTHERWISE SPECIFIED
DIMENSIONS ARE IN INCHES
TOLERANCES ON
DECIMALS ± .010 ANGLES ± 0° 30'
FRACTIONS ± 1/32
SURFACE ROUGHNESS PER MIL-STD-10 ✓
DO NOT SCALE THIS DRAWING
RELEASE DATE 10-31-63

DRAWN	WALLIN	10-29-63
CHECK		
APPR	R Grove	10-29-63
MATERIAL	—	
FINISH	—	

NON-LINEAR SYSTEMS, INC.
DEL MAR, CALIFORNIA

INPUT CABLE ASSY
SERIES 3200

CODE IDENT NO	SIZE	
03626	A	2518
SCALE	WEIGHT	SHEET

THE INFORMATION DISCLOSED HEREIN WAS ORIGINATED BY AND IS THE PROPERTY OF NON-LINEAR SYSTEMS INC. AND EXCEPT FOR RIGHTS EXPRESSLY GRANTED TO THE UNITED STATES GOVERNMENT, NON-LINEAR SYSTEMS INC. RESERVES ALL PATENT, PROPRIETARY, DESIGN, USE, SALE, MANUFACTURING AND REPRODUCTION RIGHTS THERETO.

REVISIONS

SYM	ZONE	EFFECT.	DESCRIPTION	DATE	APPROVED
		ALL	REVISED & REDRAWN	1-24-64	D. Smead

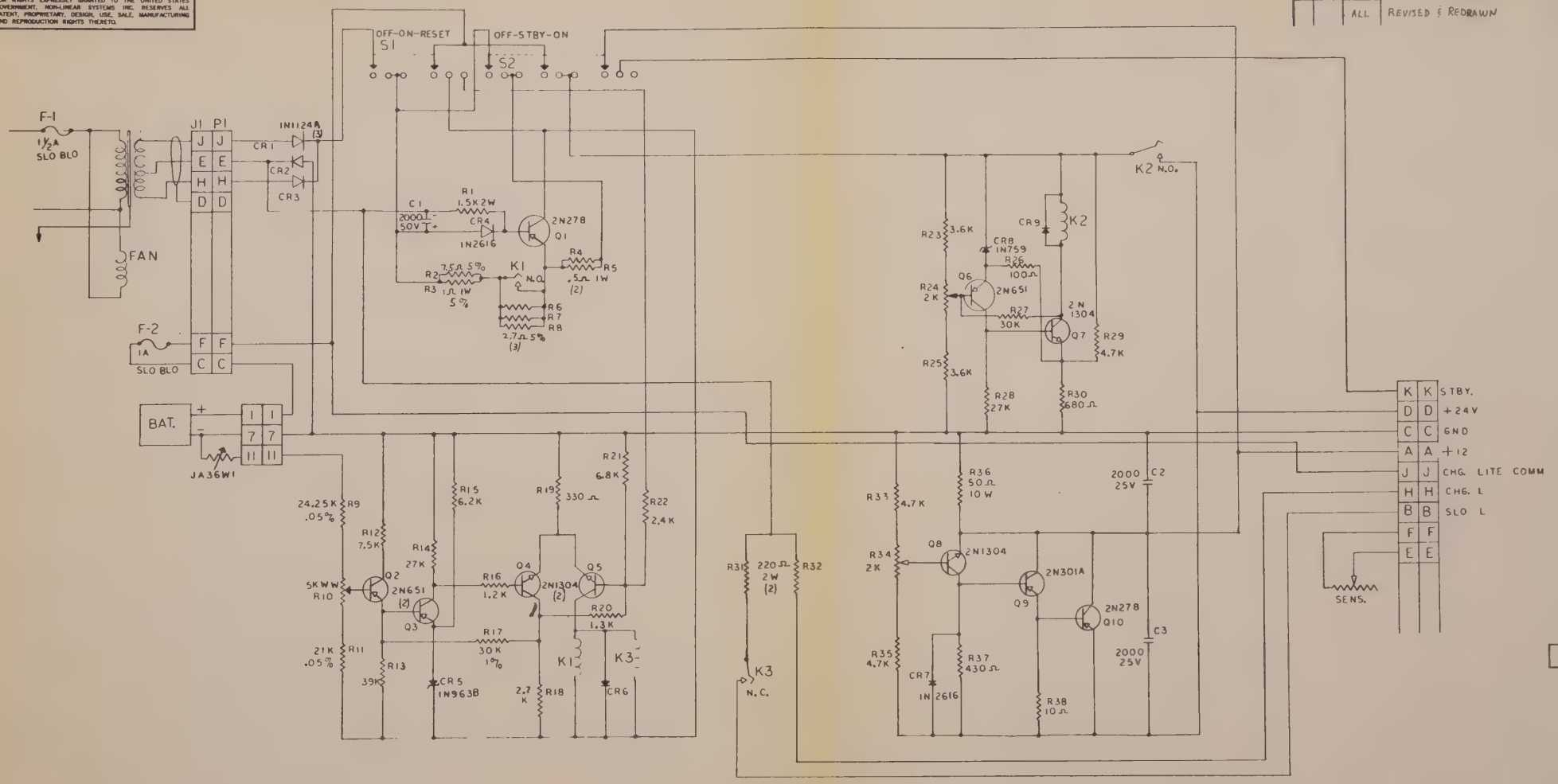

2824 SH. 2

1

NOTES: UNLESS SPECIFIED

1. RESISTORS 1/2 W. 10 %

2. CAP. IN UF.

QTY REQD	PART OR IDENTIFYING NO.	NOMENCLATURE OR DESCRIPTION	MFR. CODE	CIRCUIT REF.	ITEM NO.	NEXT ASSY.	FINAL ASSY.	NEXT ASSY	FINAL ASSY.
		PARTS LIST				APPLICATION		QTY.	
							1000		

UNLESS OTHERWISE SPECIFIED
DIMENSIONS ARE IN INCHES
TOLERANCES ON
DECIMALS ± .010 ANGLES ± 0° 30'
FRACTIONS ± 1/32
SURFACE ROUGHNESS PER MIL-STD-10 ✓
DO NOT SCALE THIS DRAWING
RELEASE DATE 10-30-63 Rev 1- 2-14-64

DRAWN D. E. SMEAD 1-25-64
CHECK 2-14-64
APPR 2-14-64
MATERIAL
FINISH

NON-LINEAR SYSTEMS, INC.
DEL MAR, CALIFORNIA

BATTERY CHARGER
MODEL 3210

CODE IDENT NO. 03626 SIZE D 2824
SCALE WEIGHT SHEET 2

THE INFORMATION DISCLOSED HEREIN WAS ORIGINATED BY AND IS THE PROPERTY OF NON-LINEAR SYSTEMS INC., AND EXCEPT FOR RIGHTS EXPRESSLY GRANTED TO THE UNITED STATES GOVERNMENT, NON-LINEAR SYSTEMS INC. RESERVES ALL PATENT, PROPRIETARY, DESIGN, USE, SALE, MANUFACTURING AND REPRODUCTION RIGHTS THERETO.

REVISIONS

SYM	ZONE	EFFECT.	DESCRIPTION	DATE	APPROVED
1		12-9-63 S/N.28	Revised & Redrawn	12-9-63	[illegible]

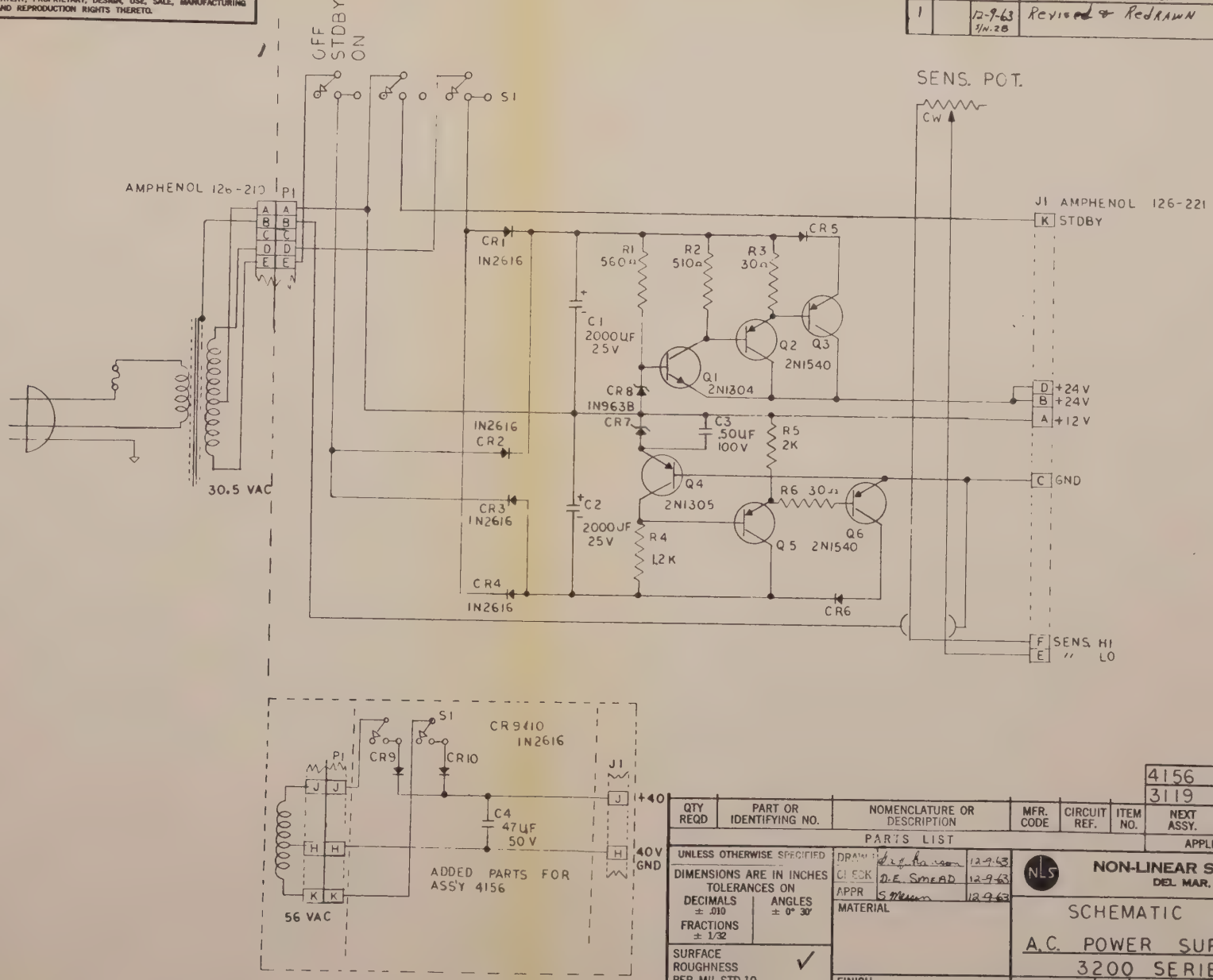

QTY REQD	PART OR IDENTIFYING NO.	NOMENCLATURE OR DESCRIPTION	MFR. CODE	CIRCUIT REF.	ITEM NO.	NEXT ASSY.	FINAL ASSY.	NEXT ASSY.	FINAL ASSY.
						4156	3205 3209		
						3119	3204		
		PARTS LIST				APPLICATION		QTY.	

UNLESS OTHERWISE SPECIFIED
DIMENSIONS ARE IN INCHES
TOLERANCES ON
DECIMALS ± .010 ANGLES ± 0° 30'
FRACTIONS ± 1/32
SURFACE ROUGHNESS PER MIL-STD-10 ✓
DO NOT SCALE THIS DRAWING
RELEASE DATE (10-23-63)

DRAWN [illegible] 12-9-63
CHECK D.E. SMEAD 12-9-63
APPR S. [illegible] 12-9-63
MATERIAL
FINISH

NON-LINEAR SYSTEMS, INC.
DEL MAR, CALIFORNIA

SCHEMATIC
A.C. POWER SUPPLY
3200 SERIES

CODE IDENT NO. 03626 | SIZE C | 3109
SCALE | WEIGHT | SHEET 2

DIETERICH-POST CLEARPRINT 3000H-10

THE INFORMATION DISCLOSED HEREIN WAS ORIGINATED BY AND IS THE PROPERTY OF NON-LINEAR SYSTEMS INC., AND EXCEPT FOR RIGHTS EXPRESSLY GRANTED TO THE UNITED STATES GOVERNMENT, NON-LINEAR SYSTEMS INC. RESERVES ALL PATENT, PROPRIETARY, DESIGN, USE, SALE, MANUFACTURING AND REPRODUCTION RIGHTS THERETO.

REVISIONS					
SYM	ZONE	EFFECT.	DESCRIPTION	DATE	APPROVED
			REVISED & REDRAWN		

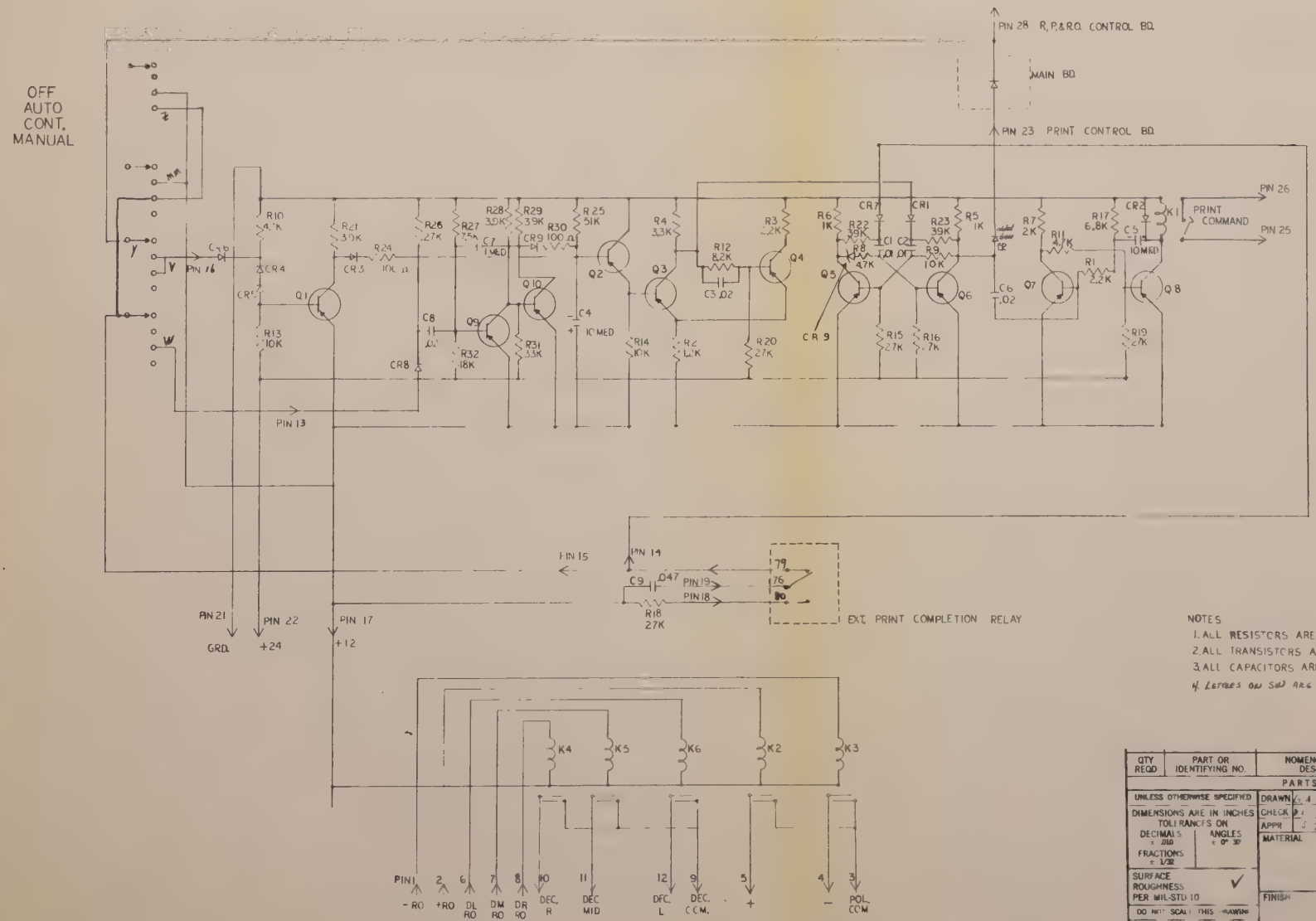

3195 SM 2

1

NOTES

1. ALL RESISTORS ARE 10% 1/2 W.
2. ALL TRANSISTORS ARE 2N1305
3. ALL CAPACITORS ARE IN MFD.
4. LETTERS ON SW ARE TO 34 PIN PLUG FOR REMOTE OPERATION

QTY REQD	PART OR IDENTIFYING NO.	NOMENCLATURE OR DESCRIPTION	MFR. CODE	CIRCUIT REF.	ITEM NO.	NEXT ASSY	FINAL ASSY.	NEXT ASSY.	FINAL ASSY.
PARTS LIST						APPLICATION		QTY.	

UNLESS OTHERWISE SPECIFIED
DIMENSIONS ARE IN INCHES
TOLERANCES ON
DECIMALS ± .010 ANGLES ± 0° 30'
FRACTIONS ± 1/32
SURFACE ROUGHNESS PER MIL-STD 10 ✓
DO NOT SCALE THIS DRAWING
RELEASE DATE

DRAWN K. A. HOLMGREN 11-15-67
CHECK D. E. SMILEY 11-15-67
APPR J. T. BRADSHAW 11-15-67
MATERIAL
FINISH

NON-LINEAR SYSTEMS, INC.
DEL MAR, CALIFORNIA

SCHEMATIC PRINT CONTROL
MODEL 3209

CODE IDENT NO.	SIZE	
03626	D	3195
SCALE	WEIGHT	SHEET

THE INFORMATION DISCLOSED HEREIN WAS ORIGINATED BY AND IS THE PROPERTY OF NON-LINEAR SYSTEMS INC., AND EXCEPT FOR RIGHTS EXPRESSLY GRANTED TO THE UNITED STATES GOVERNMENT. NON-LINEAR SYSTEMS INC. RESERVES ALL PATENT, PROPRIETARY, DESIGN, USE, SALE, MANUFACTURING AND REPRODUCTION RIGHTS THERETO.

REVISIONS					
SYM	ZONE	EFFECT.	DESCRIPTION	DATE	APPROVED

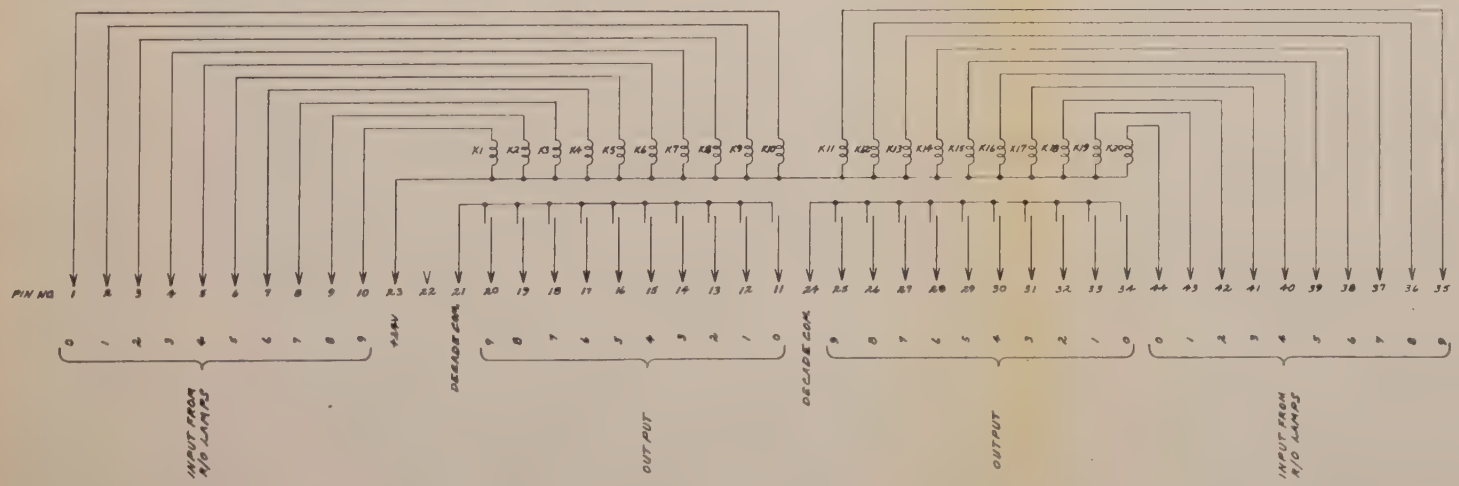

3291 sh. 2

QTY REQD	PART OR IDENTIFYING NO.	NOMENCLATURE OR DESCRIPTION	MFR. CODE	CIRCUIT REF.	ITEM NO.	NEXT ASSY	FINAL ASSY	NEXT ASSY	FINAL ASSY.
		PARTS LIST				APPLICATION		QTY.	

UNLESS OTHERWISE SPECIFIED
DIMENSIONS ARE IN INCHES
TOLERANCES ON
DECIMALS ± .010 | ANGLES ± 0° 30'
FRACTIONS ± 1/32

SURFACE ROUGHNESS PER MIL-STD-10 ✓

DO NOT SCALE THIS DRAWING

RELEASE DATE 10-6-63

DRAWN J.A. COMBS 12-5-63
CHECK 12-5-63
APPR 12-5-63

MATERIAL

FINISH

NON-LINEAR SYSTEMS, INC.
DEL MAR, CALIFORNIA

SCHEMATIC - DECIMAL PRINT CONTROL OUTPUT

MODEL 3209

CODE IDENT NO. 03626 | SIZE D | 3291

SCALE | WEIGHT | SHEET 2 of 2

THE INFORMATION DISCLOSED HEREIN WAS ORIGINATED BY AND IS THE PROPERTY OF NON-LINEAR SYSTEMS INC., AND EXCEPT FOR RIGHTS EXPRESSLY GRANTED TO THE UNITED STATES GOVERNMENT, NON-LINEAR SYSTEMS INC. RESERVES ALL PATENT, PROPRIETARY, DESIGN, USE, SALE, MANUFACTURING AND REPRODUCTION RIGHTS THERETO.

3765

REVISIONS

SYM	ZONE	EFFECT.	DESCRIPTION	DATE	APPROVED

NEXT ASSY.	FINAL ASSY.	NEXT ASSY.	FINAL ASSY.
3766	3199	1	1
APPLICATION		QTY.	

UNLESS OTHERWISE SPECIFIED

DIMENSIONS ARE IN INCHES
TOLERANCES ON
DECIMALS ± .010
ANGLES ± 0° 30'
FRACTIONS ± 1/32

SURFACE ROUGHNESS PER MIL-STD-10 ✓

DO NOT SCALE THIS DRAWING

RELEASE DATE 11-5-63

DRAWN
CHECK
APPR

MATERIAL

FINISH

NON-LINEAR SYSTEMS, INC.
DEL MAR, CALIFORNIA

CODE IDENT NO. 03626 | SIZE B | 3765

SCALE | WEIGHT | SHEET

THE INFORMATION DISCLOSED HEREIN WAS ORIGINATED BY AND IS THE PROPERTY OF NON-LINEAR SYSTEMS INC. AND EXCEPT FOR RIGHTS EXPRESSLY GRANTED TO THE UNITED STATES GOVERNMENT, NON-LINEAR SYSTEMS INC. RESERVES ALL PATENT, PROPRIETARY, DESIGN, USE, SALE, MANUFACTURING AND REPRODUCTION RIGHTS THERETO.

REVISIONS

SYM	ZONE	EFFECT.	DESCRIPTION	DATE	APPROVED
1		5/6 41—	REVISED & REDRAWN	2-11-64	[illegible]

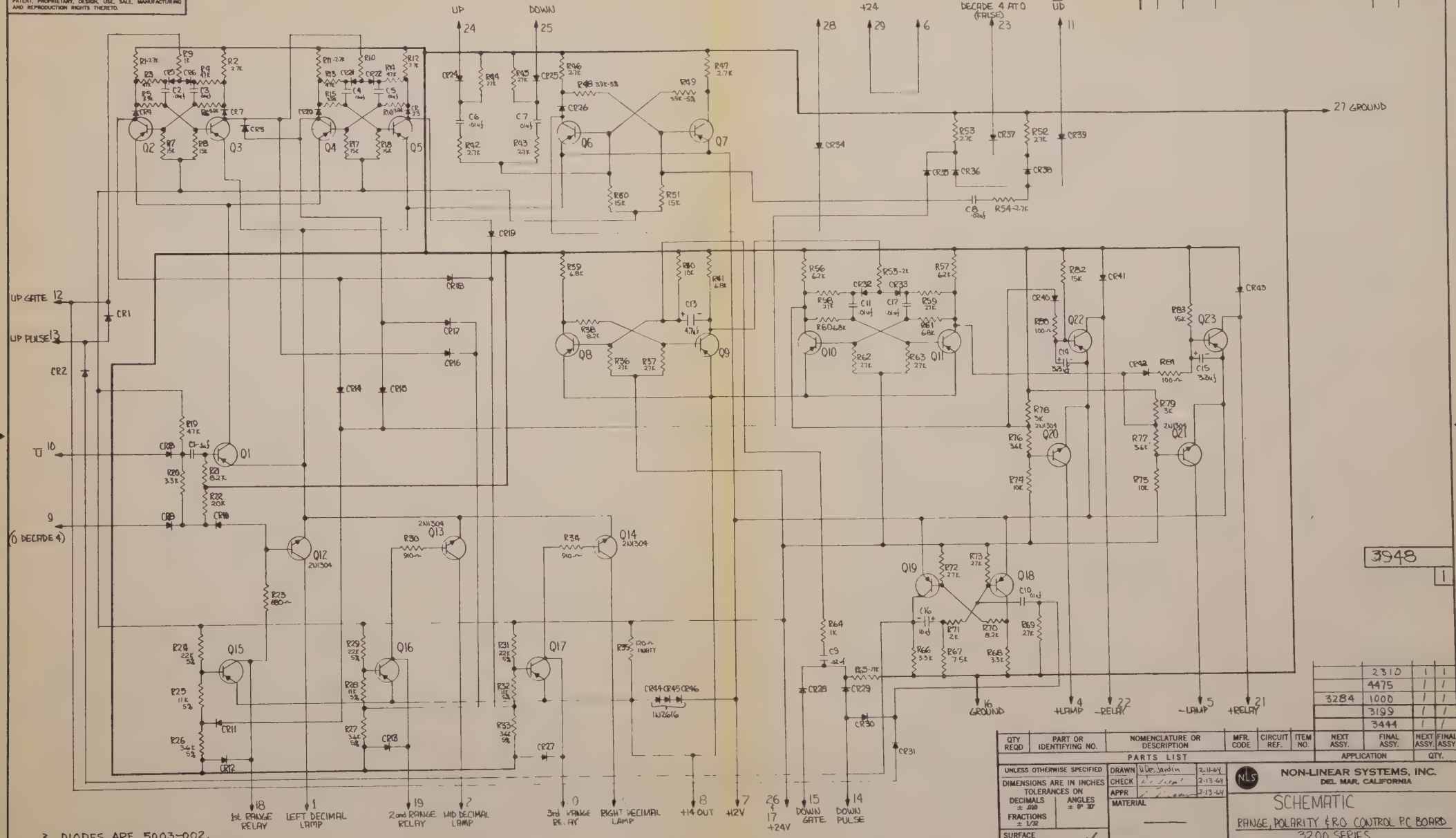

3948

1

	2310	1	1
	4475	1	1
3284	1000	1	1
	3199	1	1
	3444	1	1

QTY REQD	PART OR IDENTIFYING NO.	NOMENCLATURE OR DESCRIPTION	MFR. CODE	CIRCUIT REF.	ITEM NO.	NEXT ASSY.	FINAL ASSY.	NEXT ASSY.	FINAL ASSY.
PARTS LIST						APPLICATION		QTY.	

3. DIODES ARE 5003-002.
2. RESISTORS ARE 1/2 W, 10%.
1. TRANSISTORS ARE 2N1305.

NOTES: UNLESS OTHERWISE SPECIFIED—

THIS DRAWING SUPERSEDES DRAWING NO. 3948 CHG 0
THIS DRAWING USED ON 5/6 41 AND ON

UNLESS OTHERWISE SPECIFIED
DIMENSIONS ARE IN INCHES
TOLERANCES ON
DECIMALS ± .010 ANGLES ± 0° 30'
FRACTIONS ± 1/32
SURFACE ROUGHNESS PER MIL-STD-10 ✓
DO NOT SCALE THIS DRAWING

DRAWN	J. De Jardin	2-11-64
CHECK	[illegible]	2-13-64
APPR	[illegible]	2-13-64

MATERIAL —
FINISH —

NON-LINEAR SYSTEMS, INC.
DEL MAR, CALIFORNIA

SCHEMATIC
RANGE, POLARITY & R.O. CONTROL P.C. BOARD
3200 SERIES

CODE IDENT NO.	SIZE	
03626	D	3948
SCALE	WEIGHT	SHEET 2 OF 2

THE INFORMATION DISCLOSED HEREIN WAS ORIGINATED BY AND IS THE PROPERTY OF NON-LINEAR SYSTEMS INC., AND EXCEPT FOR RIGHTS EXPRESSLY GRANTED TO THE UNITED STATES GOVERNMENT, NON-LINEAR SYSTEMS INC. RESERVES ALL PATENT, PROPRIETARY, DESIGN, USE, SALE, MANUFACTURING AND REPRODUCTION RIGHTS THERETO.

REVISIONS					
SYM	ZONE	EFFECT.	DESCRIPTION	DATE	APPROVED

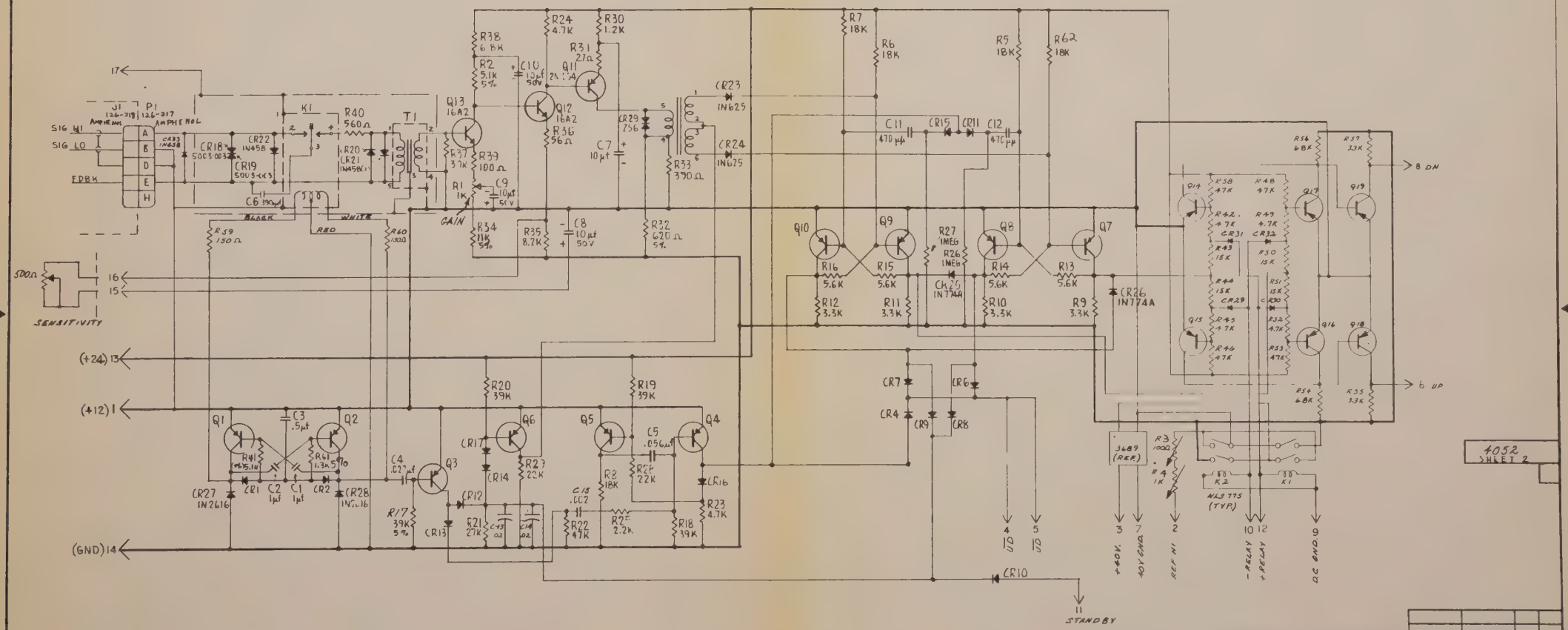

4052
SHEET 2

QTY REQD	PART OR IDENTIFYING NO.	NOMENCLATURE OR DESCRIPTION	MFR. CODE	CIRCUIT REF.	ITEM NO.	NEXT ASSY	FINAL ASSY.	NEXT ASSY.	FINAL ASSY.
		PARTS LIST				APPLICATION		QTY.	

UNLESS OTHERWISE SPECIFIED
DIMENSIONS ARE IN INCHES
TOLERANCES ON
DECIMALS ± .005
ANGLES ± 0° 30'
FRACTIONS ± 1/32
SURFACE ROUGHNESS PER MIL-STD-10 ✓
DO NOT SCALE THIS DRAWING
RELEASE DATE

DRAWN U.A. COMBS 12-9-63
CHECK D.E. SMEAD 12-9-63
APPR
MATERIAL —
FINISH —

NON-LINEAR SYSTEMS, INC.
DEL MAR, CALIFORNIA

SCHEMATIC
AMPLIFIER P.C. BOARD ASSY
MODEL 3205 & 3209

CODE IDENT NO. 03626
SIZE D
4052
SCALE
WEIGHT
SHEET 2

3 RESISTORS ARE 1/2 W, 10%
2. DIODES ARE 5003-002
1. TRANSISTORS ARE 2N1305
NOTES: UNLESS OTHERWISE SPECIFIED

THE INFORMATION DISCLOSED HEREIN WAS ORIGINATED BY AND IS THE PROPERTY OF NON-LINEAR SYSTEMS INC., AND EXCEPT FOR RIGHTS EXPRESSLY GRANTED TO THE UNITED STATES GOVERNMENT, NON-LINEAR SYSTEMS INC. RESERVES ALL PATENT, PROPRIETARY, DESIGN, USE, SALE, MANUFACTURING AND REPRODUCTION RIGHTS THERETO.

REVISIONS					
SYM	ZONE	EFFECT.	DESCRIPTION	DATE	APPROVED

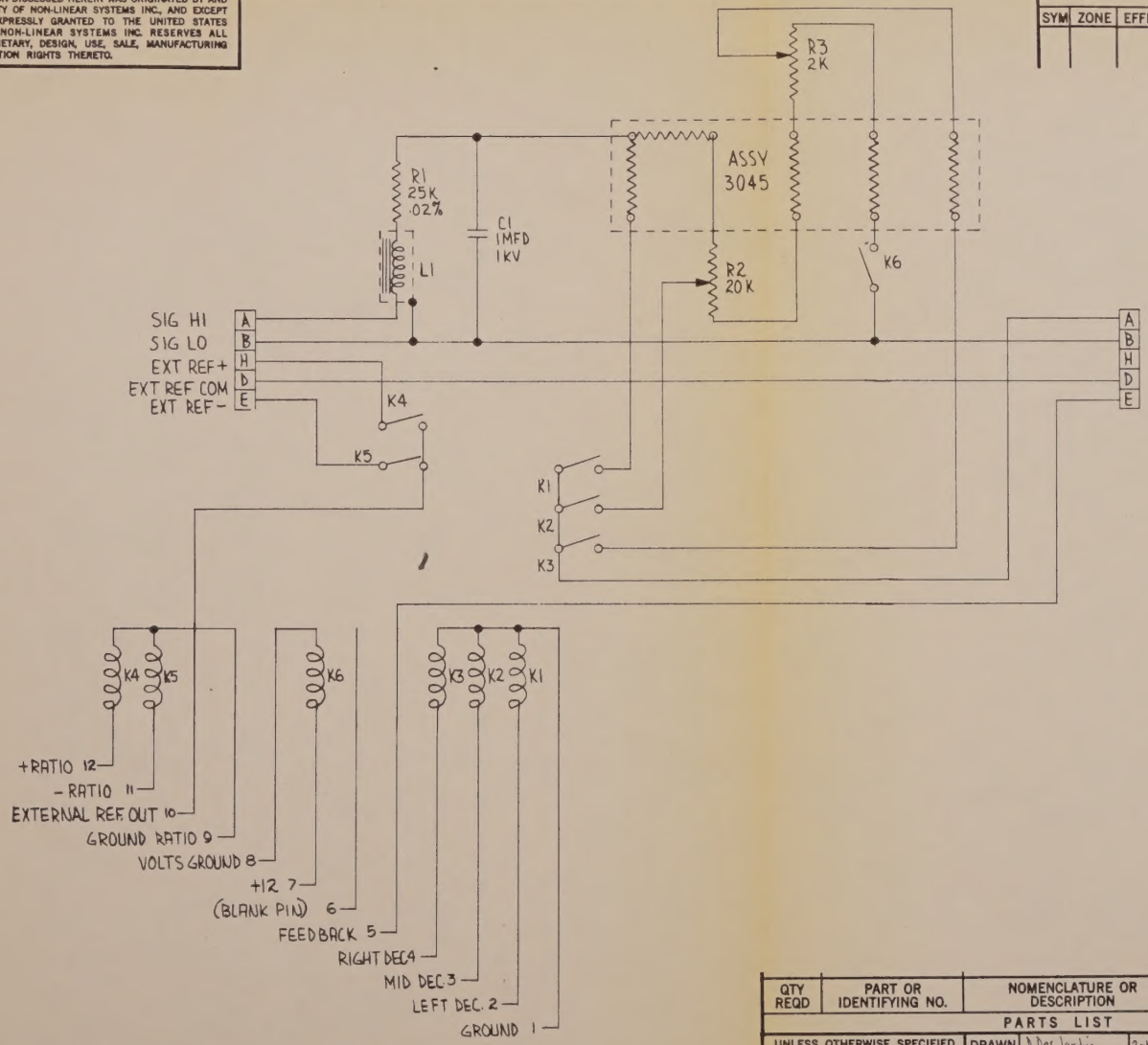

4161

2

QTY REQD	PART OR IDENTIFYING NO.	NOMENCLATURE OR DESCRIPTION	MFR. CODE	CIRCUIT REF.	ITEM NO.	NEXT ASSY.	FINAL ASSY.	NEXT ASSY.	FINAL ASSY.
		PARTS LIST				APPLICATION		QTY.	

UNLESS OTHERWISE SPECIFIED
DIMENSIONS ARE IN INCHES
TOLERANCES ON
DECIMALS ± .010
ANGLES ± 0° 30'
FRACTIONS ± 1/32
SURFACE ROUGHNESS PER MIL-STD-10 ✓
DO NOT SCALE THIS DRAWING
RELEASE DATE

DRAWN	D. Des Jardin	2-14-64
CHECK	R.E. Broad	2-14-64
APPR	[illegible]	2-14-64

MATERIAL

FINISH

NON-LINEAR SYSTEMS, INC.
DEL MAR, CALIFORNIA

SCHEMATIC
RANGE & EXT REF P.C. BOARD
3200 SERIES DVM

CODE IDENT NO.	SIZE	
03626	C	4161
SCALE	WEIGHT	SHEET

DIETERICH-POST CLEARPRINT 1020H-10

non linear
systems, inc.

DEL MAR, CALIFORNIA

MP MASTER
MA33780